深圳市智诚光电发展有限公司

ZC101WX2-206

Product Specification

深圳市智诚光电发展有限公司
WINCER ELECTRONICS LIMITED

REVISION HISTORY

REV.	ECN NO.	DESCRIPTION OF CHANGES	DATE	PREPARED
O	-	Initial Release	2012.10.22.	S.N Chen
A	-	Change the drawings of outline (Page 29&30)	2013.03.22	S.N Chen

深圳市智诚光电发展有限公司
WINCER ELECTRONICS LIMITED

Contents

No.	Items	Page
1.0	General Description	4
2.0	Absolute Maximum ratings	6
3.0	Electrical specifications.	7
4.0	Optical specifications.	9
5.0	Interface Connection	14
6.0	Signal Timing Specification	18
7.0	Signal Timing waveforms	20
8.0	Input Signals, Display Colors & Gray Scale of Colors	21
9.0	Power Sequence	22
10.0	Connector description	23
11.0	Mechanical Characteristics	24
12.0	Reliability Test	25
13.0	Handling & Cautions.	25
14.0	Label	26
15.0	Packing information	28
16.0	Mechanical Outline Dimension	29
17.0	EDID Table	31

深圳市智诚光电发展有限公司 WINCER ELECTRONICS LIMITED

1.0 GENERAL DESCRIPTION

1.1 Introduction

ZC101WX1-206isacoloractivematrixTFTLCDmoduleusingamorphous
silicon
TFT's (Thin Film Transistors) as an active switching devices. This module has a 10.07 inch diagonally measured active area with WXGA resolutions (1280 horizontal by 800 vertical pixel array). Each pixel is divided into RED, GREEN, BLUE dots which are arranged in vertical stripe and this module can display 16.7M colors. The TFT-LCD panel used for this module is adapted for a low reflection and higher color type.

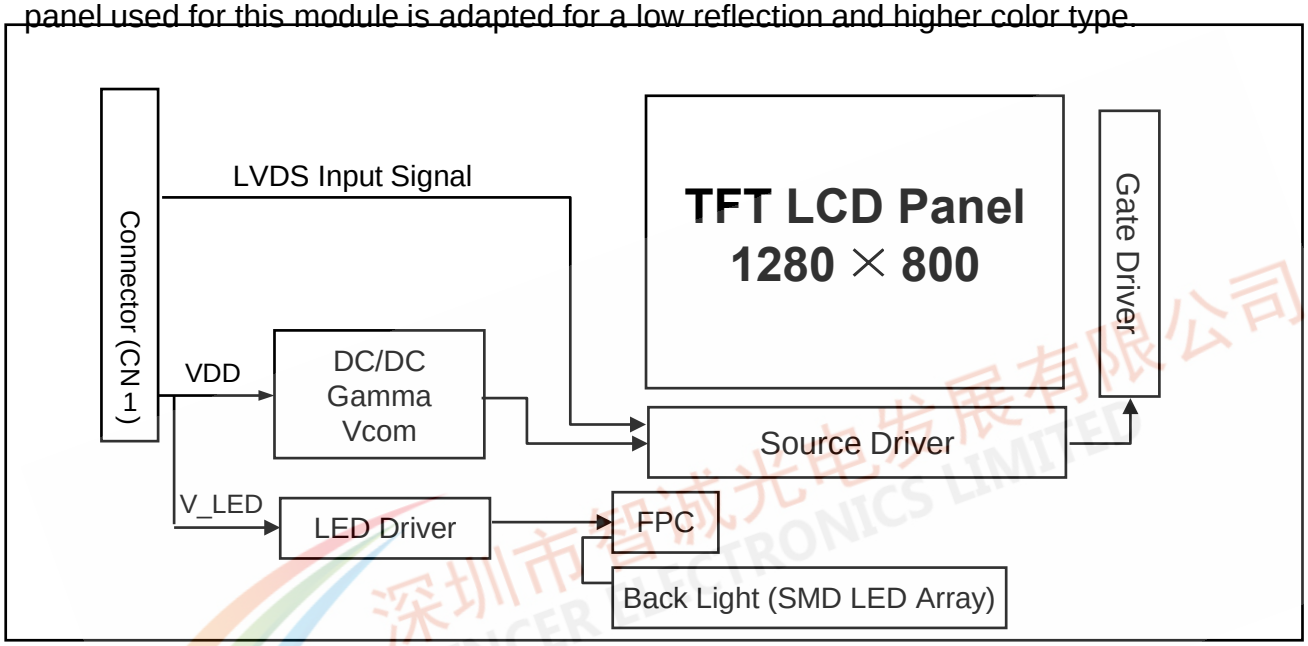

1.2 Features

- 1 Channel LVDS Interface with 1 pixel / clock
- Thin and light weight
- Display 16.7M colors (Hi FRC)
- High luminance and contrast ratio, low reflection and wide viewing angle
- DE (Data Enable) signal mode
- 3.3V for Logic Power and 3.7V for LED Back Light Power
- RoHS Compliant

1.3 Application

- Tablet & Application Mini-PC (Wide Type)

1.4 General Specification

< Table 1. General Specifications >

Parameter	Specification	Unit	Remarks
Active area	216.96(H) ×135.60(V)	mm	
Number of pixels	1280(H) ×800(V)	pixels	
Pixel pitch	169.5	μm	
Pixel arrangement	Pixels RGB stripe arrangement		
Display colors	16.7M(6bits + Hi-FRC)	colors	
Display mode	Transmission mode. Normally Black		
Outline Dimension	228.6 ×149.2 ×2.39typ.	mm	
Weight	150 (max)	gram	
Surface Treatment	Hard Coating, 3H, Low Reflection (Front Polarizer)		
Back-light	Bottom edge side, 1-LED Lighting Bar Type		36* LED Array

深圳市智诚光电发展有限公司 WINCEL ELECTRONICS LIMITED

2.0 ABSOLUTE MAXIMUM RATINGS

The followings are maximum values which, if exceed, may cause faulty operation or damage to the unit. The operational and non-operational maximum voltage and current values are listed in Table 2.

< Table 2. LCD Module Electrical Specifications > [Ta =25±2 ℃]

Parameter	Symbol	Min.	Max.	Unit	Remarks
Power Supply Voltage (LCD Module)	V_{DD}	-0.3	4.2	V	
Back-light Power Supply Voltage	HV_{DDOUT}	-0.3	18	V	
Back-light LED Current	I_{HVDD}	-	96	mA	
Back-light LED Reverse Voltage	V_R	-	2	V	
Operating Temperature	T_{OP}	0	+50	℃	1)
Storage Temperature	T_{ST}	-20	+60	℃	

Note : 1) Temperature and relative humidity range are shown in the figure below.
Wet bulb temperature should be 39 ℃ max. and no condensation of water.

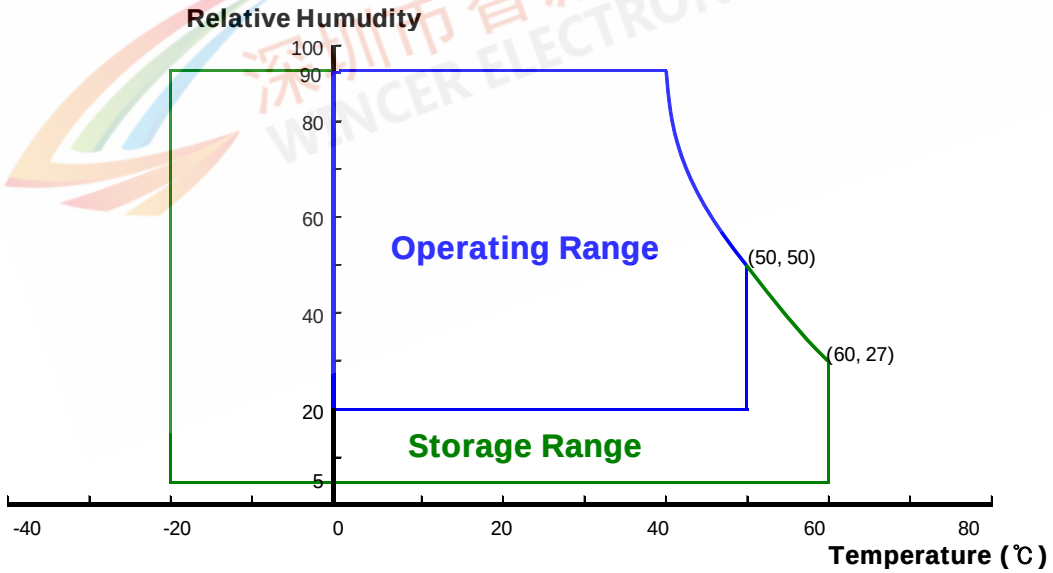

3.0 ELECTRICAL SPECIFICATIONS

3.1 TFT LCD Module

< Table 3. LCD Module Electrical Specifications > [Ta =25±2 ℃]

Parameter	Symbol	Values			Unit	Notes
		Min	Typ.	Max		
Power Supply Input Voltage	V_{DD}	3.0	3.3	3.6	V	Note 1
Power Supply Current	I_{DD}	-	303	-	mA	
LED Driver Power Supply Voltage	H_{VDD}	3	-	18	V	Note 2
LED Driver Power Supply Current	I_{HVDD}	-	568	-	mA	
LED Driver Efficiency	η	-	85	-	%	
Positive-going Input Threshold Voltage	V_{IT+}	-	-	+100	mV	Vcom = 1.2V typ.
Negative-going Input Threshold Voltage	V_{IT-}	-100	-	-	mV	
Differential input common mode voltage	V_{com}	-	1.2	-	V	V_{IH}=100mV, V_{IL}=-100mV
Power Consumption	P_D	-	1.0		W	
	P_{BL}	-	2.4		W	Have Driver
	P_{Total}	-	3.4		W	

Notes : 1. The supply voltage is measured and specified at the interface connector of LCM.
The current draw and power consumption specified is for 3.7V at 25 ℃
Max value at White Pattern

2. Calculated value for reference (VLED X ILED)

3. CTF of Power Supply Current: PD /PBL

深圳市智诚光电发展有限公司
WISEER ELECTRONICS LIMITED

3.2 Back-light Unit

< Table 4. LED Driving guideline specifications > Ta=25+/-2°C

Parameter			Min.	Typ.	Max.	Unit	Remarks
LED Forward Voltage		V_F	-	2.8	3.0	V	-
LED Forward Current		I_F	-	20	21	mA	-
LED Power Consumption		P_{LED}	-	2	2.3	W	Note 1
LED Life-Time		N/A	15,000	-	-	Hour	IF = 20mA Note 2
Power supply voltage for Back light		V_{LED}	-	16.8	-	V	
Power supply Current for Back light		I_{LED}	-	120	-	mA	
EN Control Level	Backlight on	V_{ENH}	1.2	-	-	V	EN logic high voltage
	Backlight off	V_{ENL}	-	-	0.4	V	EN logic low voltage
PWM Control Level	PWM High Level	V_{PML}	1.2	-	-	V	
	PWM Low Level	V_{PML}	-	-	0.4	V	
PWM Control Frequency		F_{PWM}	5	-	20	KHz	
PWM duty Ratio			10%	-	-	%	

Notes : 1. Calculator Value for reference $I_{LED} \times V_{LED} = P_{LED}$

2. The LED Life-time define as the estimated time to 50% degradation of initial luminous.

深圳市智诚光电发展有限公司 WINCER ELECTRONICS LIMITED

4.0 OPTICAL SPECIFICATION

4.1 Overview

The test of Optical specifications shall be measured in a dark room (ambient luminance ≤ 1lux and temperature = 25±2℃) with the equipment of Luminance meter system (Goniometer system and TOPCON BM-5) and test unit shall be located at an approximate distance 50cm from the LCD surface at a viewing angle of θ and Φ equal to 0°. While scanning θand/or Ø, the center of the measuring spot on the Display surface shall stay fixed. The backlight should be operating for 30 minutes prior to measurement. VDD shall be 3.3+/- 0.3V at 25°C. Optimum viewing angle direction is 6 'clock.

4.2 Optical Specifications

<Table 5. Optical Specifications>

Parameter		Symbol	Condition	Min.	Typ.	Max.	Unit	Remark
Viewing Angle range	Horizontal	Θ_3	CR > 10	70	80	-	Deg.	Note 1
		Θ_9		70	80	-	Deg.	
	Vertical	Θ_{12}		70	80	-	Deg.	
		Θ_6		70	80	-	Deg.	
Color Gamut				-	50	-	%	
Luminance Contrast ratio		CR	Θ = 0°	600	-	-		Note 2
Luminance of White	5 Points	Y_w	Θ = 0°	280	330	-	cd/m^2	Note 3
White Luminance uniformity	5 Points	ΔY5		-	80	-		Note 4
White Chromaticity		W_x	Θ = 0°	Typ. -0.03	0.313	Typ. +0.03		Note 5
		W_y			0.329			
Reproduction of color	Red	R_x	Θ = 0°	Typ. -0.03	0.600	Typ. +0.03		
		R_y			0.340			
	Green	G_x			0.315			
		G_y			0.565			
	Blue	B_x			0.150			
		B_y			0.125			
Response Time (Rising + Falling)		T_{RT}	Ta= 25° C Θ = 0°	-	25	-	ms	Note 6
Cross Talk		CT	Θ = 0°	-	-	2.0	%	Note 7

深圳市智诚光电发展有限公司 WINCER ELECTRONICS LIMITED

Notes : 1. Viewing angle is the angle at which the contrast ratio is greater than 10. The viewing angles are determined for the horizontal or 3, 9 o'clock direction and the vertical or 6, 12 o'clock direction with respect to the optical axis which is normal to the LCD surface (see FIGURE 1).

2. Contrast measurements shall be made at viewing angle of Θ= 0 and at the center of the LCD surface. Luminance shall be measured with all pixels in the view field set first to white, then to the dark (black) state . (see FIGURE 1) Luminance Contrast Ratio (CR) is defined mathematically.

$$CR = \frac{\text{Luminance when displaying a white raster}}{\text{Luminance when displaying a black raster}}$$

3. Center Luminance of white is defined as luminance values of 5point average across the LCD surface. Luminance shall be measured with all pixels in the view field set first to white. This measurement shall be taken at the locations shown in FIGURE 2 for a total of the measurements per display, the LED current is set at 20mA.

4. The White luminance uniformity on LCD surface is then expressed as : ΔY = Minimum Luminance of 5 (13)points / Maximum Luminance of 5(13) (points (see FIGURE 2).

5. The color chromaticity coordinates specified in Table 5 shall be calculated from the spectral data measured with all pixels first in red, green, blue and white. Measurements shall be made at the center of the panel.

6. The electro-optical response time measurements shall be made as FIGURE 3 by switching the "data" input signal ON and OFF. The times needed for the luminance to change from 10% to 90% is Tr, and 90% to 10% is Td.

7. Cross-Talk of one area of the LCD surface by another shall be measured by comparing the luminance (YA) of a 25mm diameter area, with all display pixels set to a gray level, to the luminance (YB) of that same area when any adjacent area is driven dark. (See FIGURE 4).

4.3 Optical measurements

Figure 1. Measurement Set Up

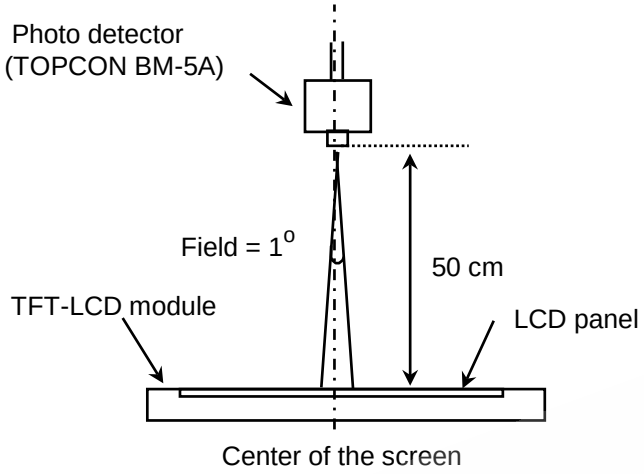

View angel range measurement setup

Figure 2. White Luminance and Uniformity Measurement Locations (5 points)

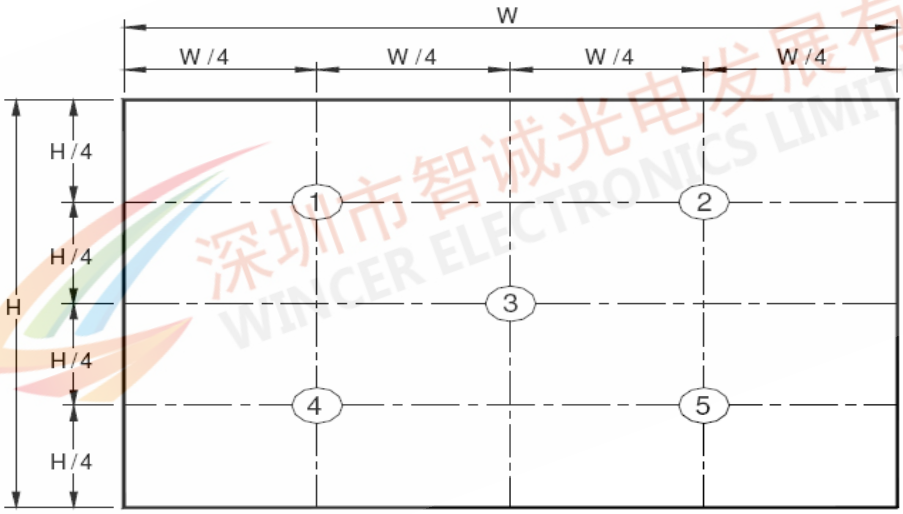

Center Luminance of white is defined as luminance values of center 5 points across the LCD surface. Luminance shall be measured with all pixels in the view field set first to white. This measurement shall be taken at the locations shown in FIGURE 2 for a total of the measurements per display.
The White luminance uniformity on LCD surface is then expressed as : ΔY5 = Minimum Luminance of 5 points / Maximum Luminance of 5points (see FIGURE 2).

Figure 3. Uniformity Measurement Locations (13 points)

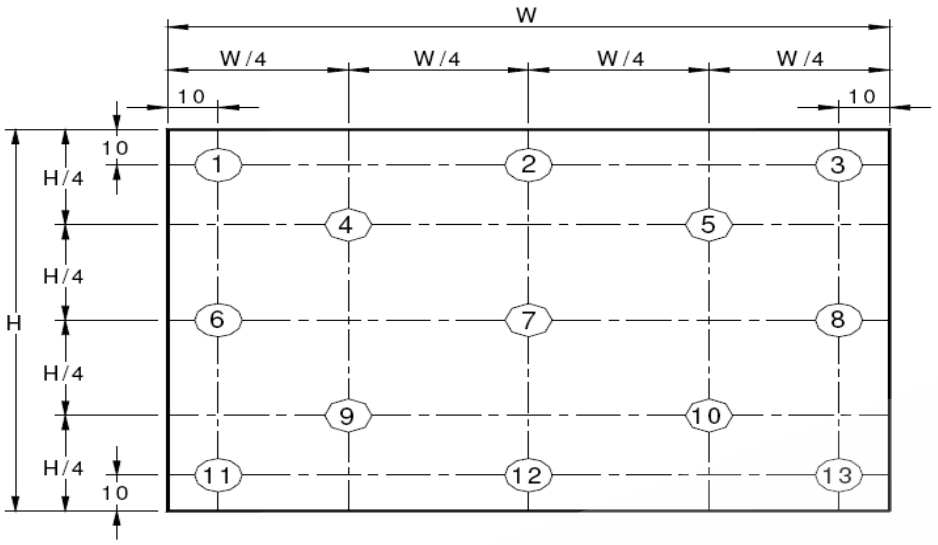

The White luminance uniformity on LCD surface is then expressed as : ΔY13 = Minimum Luminance of 13 points /Maximum Luminance of 13 points (see FIGURE 3).
The White luminance uniformity of 5 point is the same test method as 13 point using FIGURE 2.

Figure 4. Response Time Testing

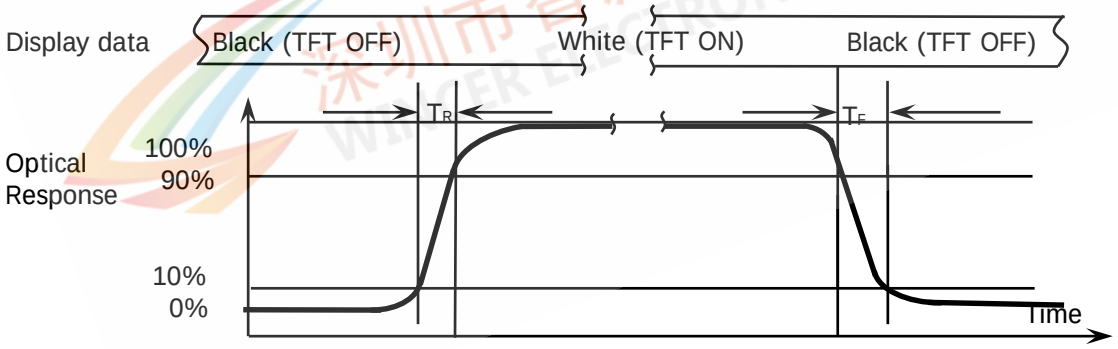

The electro-optical response time measurements shall be made as shown in FIGURE 4 by switching the “data” input signal ON and OFF. The times needed for the luminance to change from 10% to 90% is Tr and 90% to 10% is Td.

Figure 5. Cross Modulation Test Description

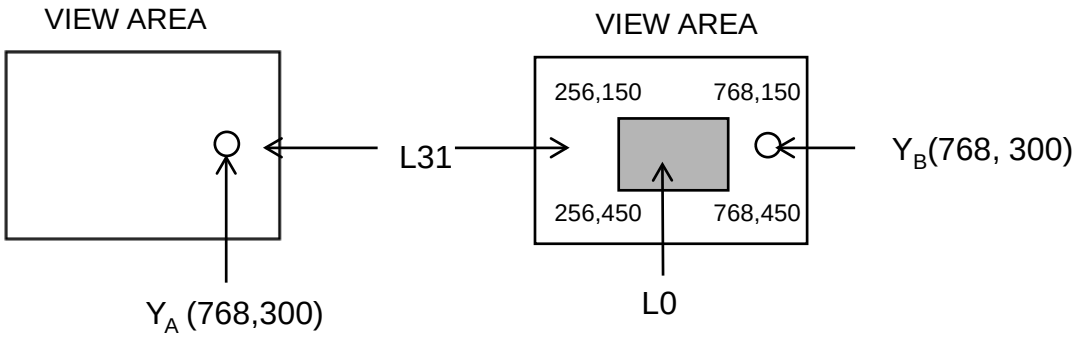

$$\text{Cross-Talk (\%)} = \left| \frac{Y_B - Y_A}{Y_A} \right| \times 100$$

Where:

Y_A = Initial luminance of measured area (cd/m^2)
Y_B = Subsequent luminance of measured area (cd/m^2)

The location measured will be exactly the same in both patterns.

Cross-Talk of one area of the LCD surface by another shall be measured by comparing the luminance (YA) of a 25mm diameter area, with all display pixels set to a gray level, to the luminance (YB) of that same area when any adjacent area is driven dark (Refer to FIGURE 5).

深圳市智诚光电有限公司
WINCER ELECTRONICS LIMITED

5.0 INTERFACE CONNECTION.

5.1 Electrical Interface Connection

The electronics interface connector is 20455-040E-12.
The connector interface pin assignments are listed in Table 6.

<Table 6. 1. Pin Assignments for the Interface Connector>

Terminal	Symbol	Functions
Pin No.	Symbol	Description
1	NC	Non Connection
2	VDDIN	Power supply VDDIN=3.3V (Typ.)
3	VDDIN	
4	VDC	Power supply VDC=3.3V (Typ.)
5	NC	Non Connection
6	CLK EDID	CLK for EDID function use
7	Data EDID	CLK for EDID function use
8	RIN0-	LVDS Negative data signal (-)
9	RIN0+	LVDS Positive data signal (+)
10	GND	GROUND
11	RIN1-	LVDS Negative data signal (-)
12	RIN1+	LVDS Positive data signal (+)
13	GND	GROUND
14	RIN2-	LVDS Negative data signal (-)
15	RIN2+	LVDS Positive data signal (+)
16	GND	GROUND
17	LVDS_CLK-	LVDS Negative CLK signal (-)
18	LVDS_CLK+	LVDS Positive CLK signal (+)
19	GND	GROUND
20	RIN3-	LVDS Negative data signal (-)

深圳市智诚光电发展有限公司
WINCER ELECTRONICS LIMITED

<Table 6.2. Pin Assignments for the Interface Connector>

Terminal	Symbol	Functions
Pin No.	Symbol	Description
21	RIN3+	LVDS Positive data signal (+)
22	CE_EN	Color engine enable
23	NC	Non Connection
24	NC	Non Connection
25	GND	GROUND
26	NC	Non Connection
27	NC	Non Connection
28	GND	GROUND
29	NC	Non Connection
30	NC	Non Connection
31	LED_GND	LED GROUND
32	LED_GND	
33	LED_GND	
34	NC	Non Connection
35	LED_PWM	LED driver PWM duty
36	LED_EN	LED driver enable
37	CABC_EN	CABC function enable
38	VLED	Power supply VLED=3~18V (Typ.)
39	VLED	
40	VLED	

深圳市智威光电发展有限公司 WINCER ELECTRONICS LIMITED

5-2. LVDS Interface

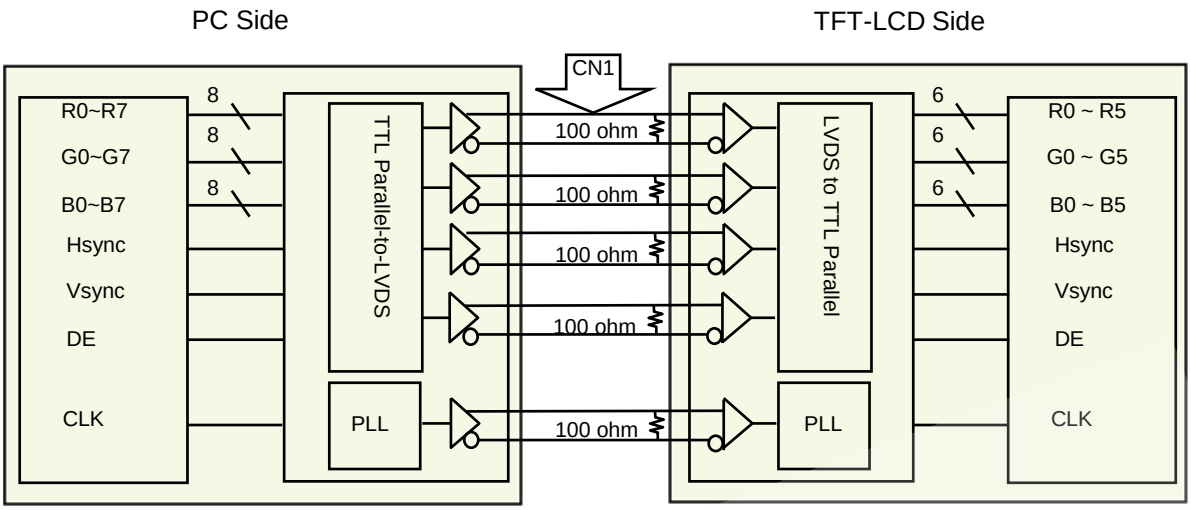

5.3.LVDS Input signal

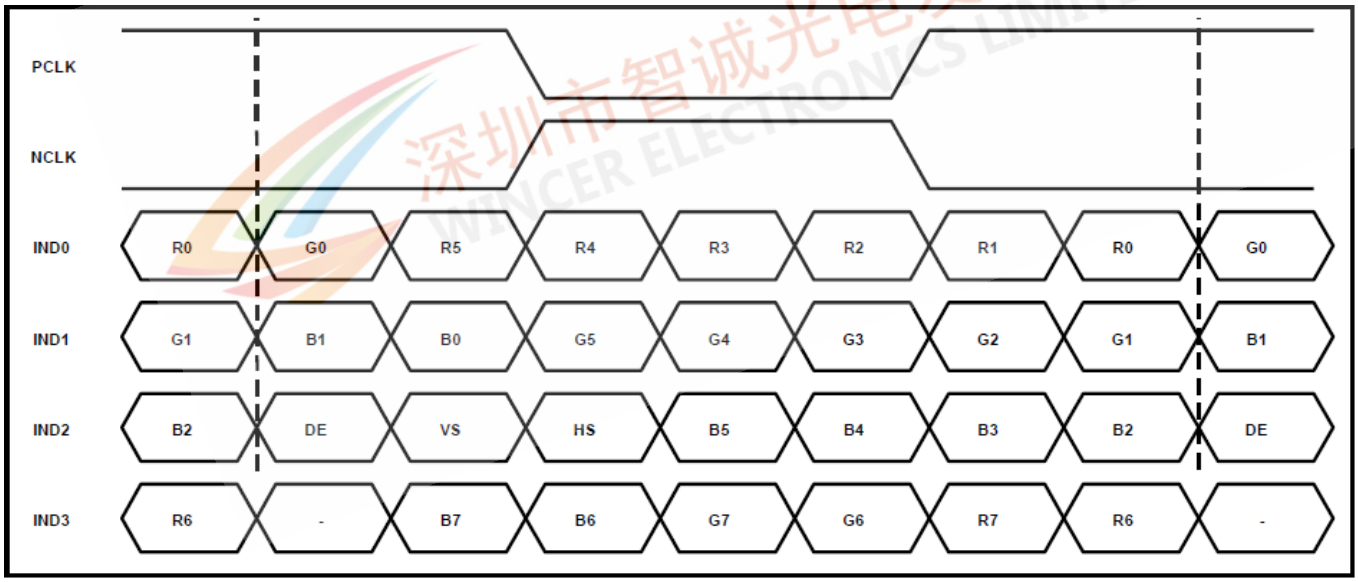

深圳市智诚光电发展有限公司
WANCER ELECTRONICS LIMITED

5.4 Data Input Format

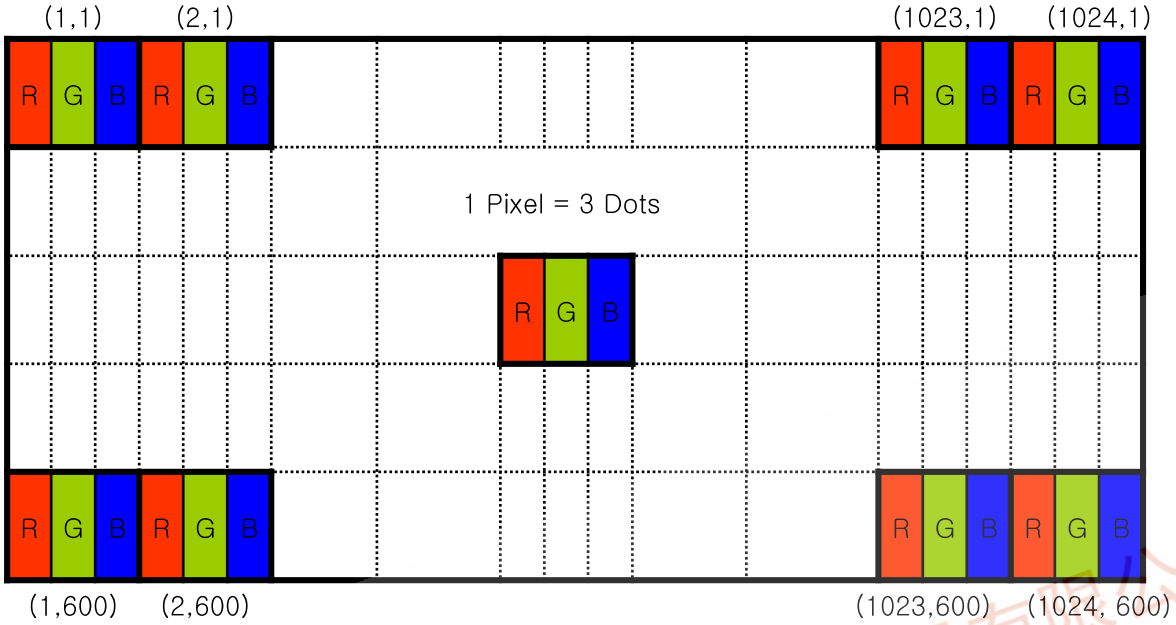

Display Position of Input Data (V-H)

深圳市智诚光电发展有限公司
WINCER ELECTRONICS LIMITED

6.0 SIGNAL TIMING SPECIFICATION

6.1 The ZDX101WX1-206 is operated by the DE only.

Parameter		Symbol	Min.	Typ.	Max.	Unit
Clock	Frequency	1/Tc	60	65	80	MHz
	Cycle	Tc	16.66	15.38	12.5	ns
Data Enable	Horizontal Period	THd	1280	1280	1280	Tc
	Horizontal Cycle	TH	1310	1330	1560	TC
		TH_time	19.5	20.46	21.83	ns
	Vertical Period	TVd	800	800	800	TC
	Vertical Cycle	TV		812		TC

深圳市智诚光电发展有限公司
WINCER ELECTRONICS LIMITED

6.2 LVDS Rx Interface Timing Parameter

The specification of the LVDS Rx interface timing parameter is shown in Table 8.

<Table 8. LVDS Rx Interface Timing Specification>

Item	Symbol	Min	Typ	Max	Unit	Remark
CLKIN Period	tRCIP	14.88	19.53	24.51	nsec	
Input Data 0	tRIP1	-0.4	0.0	+0.4	nsec	
Input Data 1	tRIP0	tRICP/7-0.4	tRICP/7	tRICP/7+0.4	nsec	
Input Data 2	tRIP7	2 ×tRICP/7-0.4	2 ×tRICP/7	2 ×tRICP/7+0.4	nsec	
Input Data 3	tRIP6	3 ×tRICP/7-0.4	3 ×tRICP/7	3 ×tRICP/7+0.4	nsec	
Input Data 4	tRIP5	4 ×tRICP/7-0.4	4 ×tRICP/7	4 ×tRICP/7+0.4	nsec	
Input Data 5	tRIP4	5 ×tRICP/7-0.4	5 ×tRICP/7	5 ×tRICP/7+0.4	nsec	
Input Data 6	tRIP3	6 ×tRICP/7-0.4	6 ×tRICP/7	6 ×tRICP/7+0.4	nsec	
Input Data 7	tRIP2	7 ×tRICP/7-0.4	7 ×tRICP/7	7 ×tRICP/7+0.4	nsec	

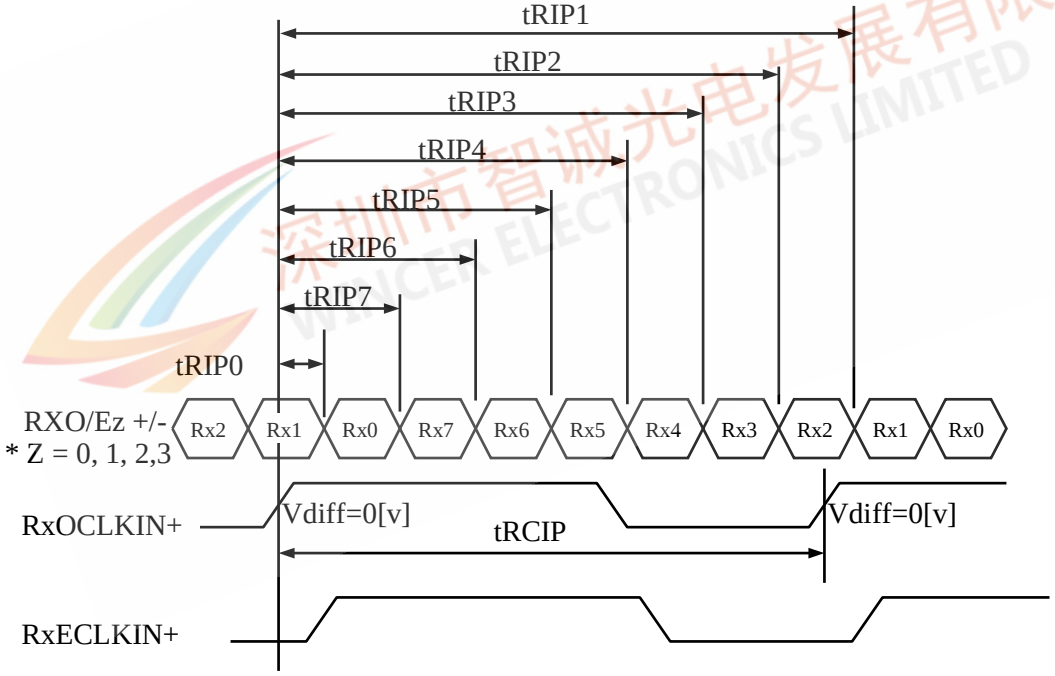

* Vdiff = (RXO/Ez+)-(RXO/Ez-),…. ,(RXO/ECLK+)-(RXO/ECLK-)

7.0 SIGNAL TIMING WAVEFORMS OF INTERFACE SIGNAL

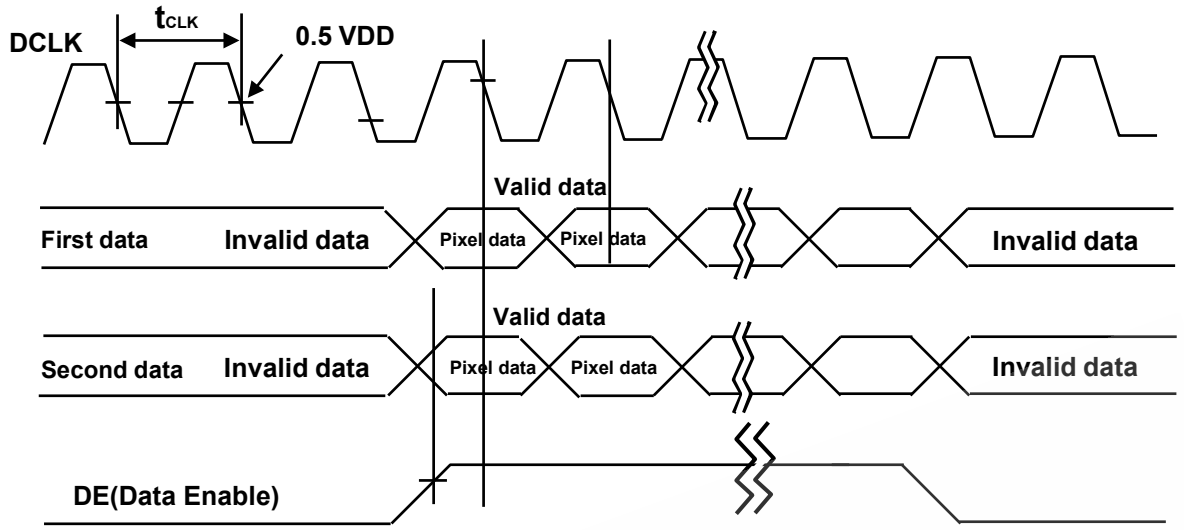

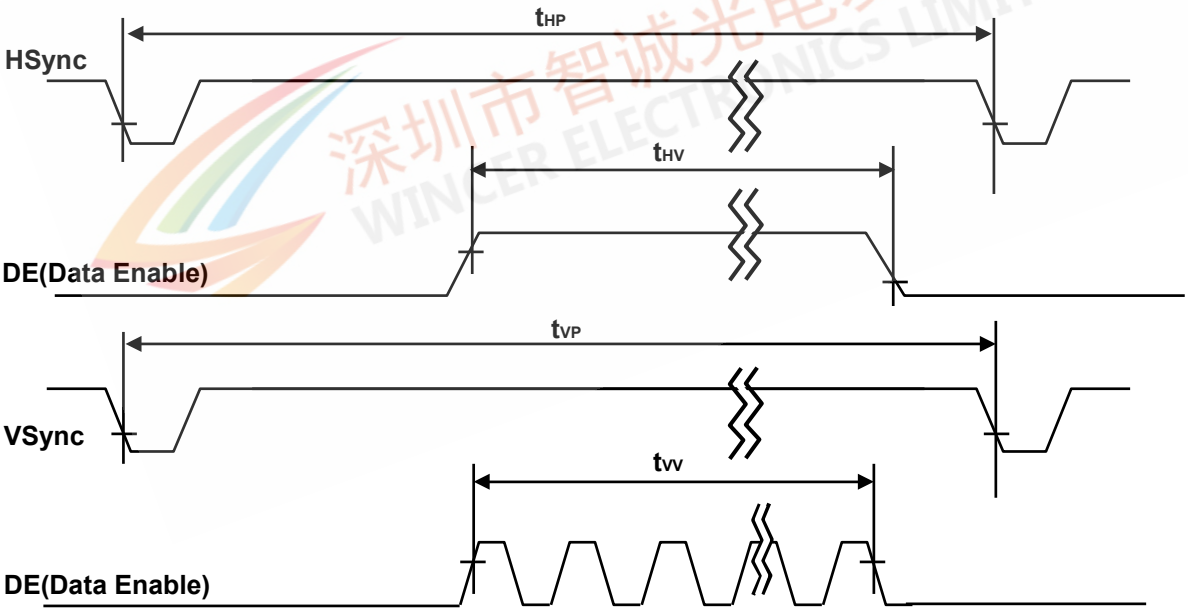

深圳市智诚光电发展有限公司
WINCER ELECTRONICS LIMITED

8.0 INPUT SIGNALS, BASIC DISPLAY COLORS & GRAY SCALE OF COLORS

Color & Gray Scale		Input Data Signal																							
		Red Data								Green Data								Blue Data							
		R7	R6	R5	R4	R3	R2	R1	R0	G7	G6	G5	G4	G3	G2	G1	G0	B7	B6	B5	B4	B3	B2	B1	B0
Basic Colors	Black	0	0	0	0	0	0	0	0	0	0	0	0	0	0	0	0	0	0	0	0	0	0	0	0
	Blue	0	0	0	0	0	0	0	0	0	0	0	0	0	0	0	0	1	1	1	1	1	1	1	1
	Green	0	0	0	0	0	0	0	0	1	1	1	1	1	1	1	1	0	0	0	0	0	0	0	0
	Cyan	0	0	0	0	0	0	0	0	1	1	1	1	1	1	1	1	1	1	1	1	1	1	1	1
	Red	1	1	1	1	1	1	1	1	0	0	0	0	0	0	0	0	0	0	0	0	0	0	0	0
	Magenta	1	1	1	1	1	1	1	1	0	0	0	0	0	0	0	0	1	1	1	1	1	1	1	1
	Yellow	1	1	1	1	1	1	1	1	1	1	1	1	1	1	1	1	0	0	0	0	0	0	0	0
	White	1	1	1	1	1	1	1	1	1	1	1	1	1	1	1	1	1	1	1	1	1	1	1	1
Gray Scale of Red	Black	0	0	0	0	0	0	0	0	0	0	0	0	0	0	0	0	0	0	0	0	0	0	0	0
	△	0	0	0	0	0	0	0	1	0	0	0	0	0	0	0	0	0	0	0	0	0	0	0	0
	Darker	0	0	0	0	0	0	1	0	0	0	0	0	0	0	0	0	0	0	0	0	0	0	0	0
	△	↑								↑								↑							
	▽	↓								↓								↓							
	Brighter	1	1	1	1	1	1	0	1	0	0	0	0	0	0	0	0	0	0	0	0	0	0	0	0
	▽	1	1	1	1	1	1	1	0	0	0	0	0	0	0	0	0	0	0	0	0	0	0	0	0
	Red	1	1	1	1	1	1	1	1	0	0	0	0	0	0	0	0	0	0	0	0	0	0	0	0
Gray Scale of Green	Black	0	0	0	0	0	0	0	0	0	0	0	0	0	0	0	0	0	0	0	0	0	0	0	0
	△	0	0	0	0	0	0	0	0	0	0	0	0	0	0	0	1	0	0	0	0	0	0	0	0
	Darker	0	0	0	0	0	0	0	0	0	0	0	0	0	0	1	0	0	0	0	0	0	0	0	0
	△	↑								↑								↑							
	▽	↓								↓								↓							
	Brighter	0	0	0	0	0	0	0	0	1	1	1	1	1	1	0	1	0	0	0	0	0	0	0	0
	▽	0	0	0	0	0	0	0	0	1	1	1	1	1	1	1	0	0	0	0	0	0	0	0	0
	Green	0	0	0	0	0	0	0	0	1	1	1	1	1	1	1	1	0	0	0	0	0	0	0	0
Gray Scale of Blue	Black	0	0	0	0	0	0	0	0	0	0	0	0	0	0	0	0	0	0	0	0	0	0	0	0
	△	0	0	0	0	0	0	0	0	0	0	0	0	0	0	0	0	0	0	0	0	0	0	0	1
	Darker	0	0	0	0	0	0	0	0	0	0	0	0	0	0	0	0	0	0	0	0	0	0	1	0
	△	↑								↑								↑							
	▽	↓								↓								↓							
	Brighter	0	0	0	0	0	0	0	0	0	0	0	0	0	0	0	0	1	1	1	1	1	1	0	1
	▽	0	0	0	0	0	0	0	0	0	0	0	0	0	0	0	0	1	1	1	1	1	1	1	0
	Blue	0	0	0	0	0	0	0	0	0	0	0	0	0	0	0	0	1	1	1	1	1	1	1	1
Gray Scale of White	Black	0	0	0	0	0	0	0	0	0	0	0	0	0	0	0	0	0	0	0	0	0	0	0	0
	△	0	0	0	0	0	0	0	1	0	0	0	0	0	0	0	1	0	0	0	0	0	0	0	1
	Darker	0	0	0	0	0	0	1	0	0	0	0	0	0	0	1	0	0	0	0	0	0	0	1	0
	△	↑								↑								↑							
	▽	↓								↓								↓							
	Brighter	1	1	1	1	1	1	0	1	1	1	1	1	1	1	0	1	1	1	1	1	1	1	0	1
	▽	1	1	1	1	1	1	1	0	1	1	1	1	1	1	1	0	1	1	1	1	1	1	1	0
	White	1	1	1	1	1	1	1	1	1	1	1	1	1	1	1	1	1	1	1	1	1	1	1	1

9.0 POWER SEQUENCE

To prevent a latch-up or DC operation of the LCD module, the power on/off sequence shall be as shown in below

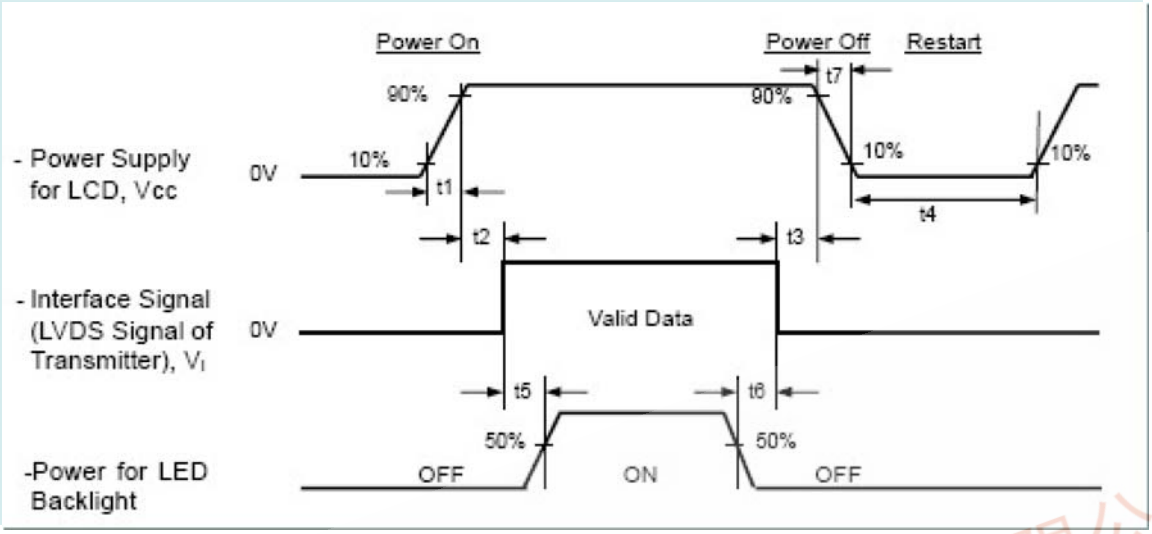

Parameter	Values			Units
	Min	Typ	Max	
T1	0.5	-	10	ms
T2	0	-	50	ms
T3	0	-	30	ms
T4	200	-	-	ms
T5	200	-	-	ms
T6	200	-	-	ms

Notes:

1. When the power supply VDD is 0V, keep the level of input signals on the low or keep high impedance.
2. Do not keep the interface signal high impedance when power is on. Back Light must be turn on after power for logic and interface signal are valid.

10.0 Connector Description

Physical interface is described as for the connector on LCM.
These connectors are capable of accommodating the following signals and will be following components.

10.1 TFT LCD Module

Connector Name /Description	For Signal Connector
Manufacturer	IPEX or Compatible
Type/ Part Number	20455-040E-12 or Compatible

10.2 LED Connector(Jointing)

Pin No.	Symbol	For Signal Connector
1	VLEDP	LED Anode Power Supply
2	VLEDN	LED Cathode Power Supply

深圳市智诚光电发展有限公司
WINCER ELECTRONICS LIMITED

11.0 MECHANICAL CHARACTERISTICS

11.1 Dimensional Requirements

FIGURE 5 shows mechanical outlines for the model BP101WX1-206.
Other parameters are shown in Table 9.

<Table 9. Dimensional Parameters>

Parameter	Specification	Unit
Active Area	216.96 (H) ×135.6 (V)	
Number of pixels	1280(H) X800 (V) (1 pixel = R + G + B dots)	
Pixel pitch	0.1695	
Pixel arrangement	RGB Vertical stripe	
Display colors	16.7M	
Display mode	Normally Black	
Dimensional outline	228.6*149.26*2.39 (Typ.)	mm
Weight	150 (Max)	gram
Back-light	LED, Horizontal-LED Array type	

11.2 Mounting

See FIGURE 6.

11.3 Glare and Polarizer Hardness.

The surface of the LCD has an low reflection coating and hard coating to reduce scratching.

11.4 Light Leakage

There shall not be obvious visible light from the back-lighting system around the edges of the screen as seen from a distance 50cm from the screen with an overhead light level of 150lux.

深圳市智诚光电发展有限公司
SHENCER ELECTRONICS LIMITED

12.0 RELIABILITY TEST

The Reliability test items and its conditions are shown in below.

<Table 10. Reliability test>

No		Conditions
1	High temperature storage test	Ta = 60 ℃, 240 hrs
2	Low temperature storage test	Ta = -20 ℃, 240 hrs
3	High temperature & high humidity operation test	Ta = 50 ℃, 90%RH, 240 hrs
4	High temperature operation test	Ta = 50 ℃, 240 hrs
5	Low temperature operation test	Ta = 0 ℃, 240 hrs
6	Thermal shock	Ta = -20 ℃ ↔ 60 ℃ (0.5 hr), 100 cycle
7	Power on/off	2s on/2s off 20000cycles
8	Vibration test (non-operating)	1.5G, 10~500Hz Sign X,Y,Z / Sweep rate : 0.5hour
9	Shock test (non-operating)	220G, Half Sine Wave 2msec ±X,±Y,±Z Once for each direction
10	Electro-static discharge test (non-operating)	Air : 150 pF, 330Ω, 15 KV Contact : 150 pF, 330Ω, 8 KV

13.0 HANDLING & CAUTIONS

(1) Cautions when taking out the module

- Pick the pouch only, when taking out module from a shipping package.

(2) Cautions for handling the module

- As the electrostatic discharges may break the LCD module, handle the LCD module with care. Peel a protection sheet off from the LCD panel surface as slowly as possible.
- As the LCD panel and back - light element are made from fragile glass material, impulse and pressure to the LCD module should be avoided.
- As the surface of the polarizer is very soft and easily scratched, use a soft dry cloth without chemicals for cleaning.
- Do not pull the interface connector in or out while the LCD module is operating.
- Put the module display side down on a flat horizontal plane.
- Handle connectors and cables with care.

(3) Cautions for the operation

- When the module is operating, do not lose CLK, ENAB signals. If any one of these signals is lost, the LCD panel would be damaged.
- Obey the supply voltage sequence. If wrong sequence is applied, the module would be damaged.

REV	Modifier	DATE	REVISED DESCRIPTIONS
△1	黎业会	16.07.21	FIRST
△1	黎业会	16.12.09	增加二维码
△2	黎业会	17.12.19	增加条码

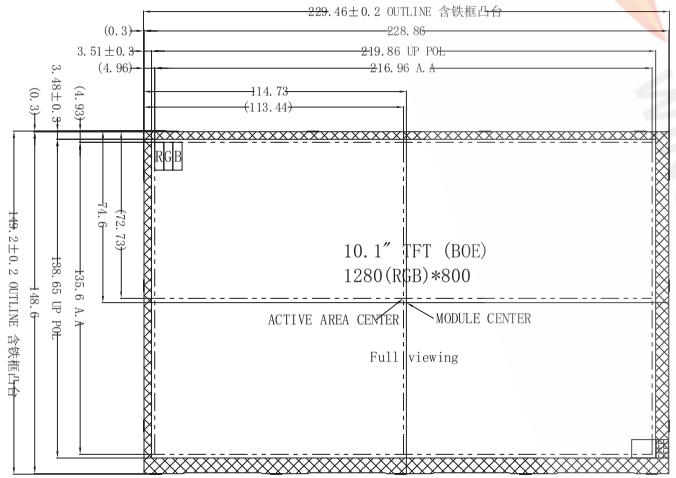

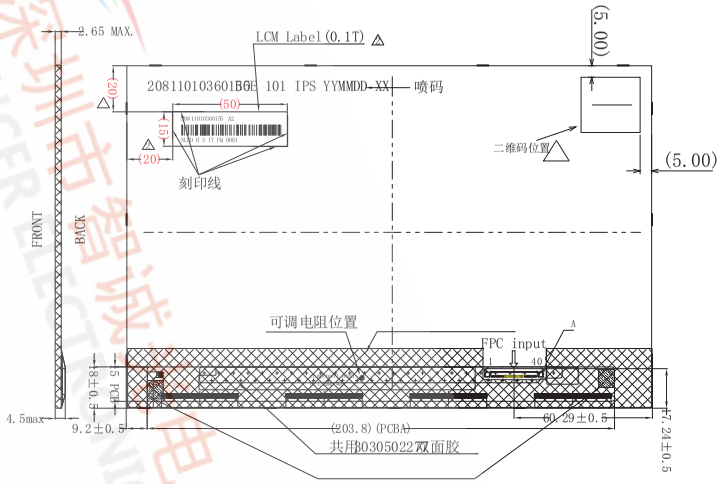

PIN DESCRIPTION

1	NC
2	VDD
3	VDD
4	NC
5	NC
6	NC
7	NC
8	RIN0-
9	RIN0+
10	GND
11	RIN1-
12	RIN1+
13	GND
14	RIN2-
15	RIN2+
16	GND
17	CLKIN-
18	CLKIN+
19	GND
20	RIN3-
21	RIN3+
22	GND
23	NC
24	NC
25	GND
26	NC
27	NC
28	GND
29	NC
30	NC
31	GND
32	GND
33	GND
34	NC
35	PWM
36	LED-EN
37	NC
38	VLED(5V)
39	VLED(5V)
40	VLED(5V)

1. Display mode: Transmissive,Normal BLACK
2. VIEWING DIRECTION:FULL
3. Luminance(cd/m2): 250(MIN),300(TYP);
   Chromaticity:X:0.270~0.320;Y:0.315~0.365;
   uniformity:70%(min); 80%(TYE)
4. Operating temp.: -10° C~+50° C
   Storage temp.: -20° C~+60° C
5. DRIVER IC: Source_HX8245-E04/Gata_HX8695-B01
6. TFT_FPC connector: HD1S040HA1 or equivalent
7. Back Light:36 Chip White LED(25mA/LED),Vf=12.8V
8. 上偏光片：磨面片0.135MM IPS HC>2H，下偏光片：光面片0.135MM IPS
9. 铁框材质：镀铝锌板T=0.20T
10. All the raw material are Rohs complicant
11. Demensions with mark"○" are important, with mark "()" are reference

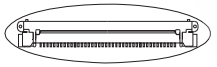

DETAIL A(3:1)
Connector:HD1S040HA1 or equivalent

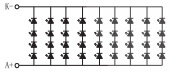

4*9=36 LED If=225mA
Backlight LED Circuit

名 称			
1:1	UNMARKED TOLERANCE 未标注公差	mm	
	2016-06-24		

深圳市智诚科电发展有限公司 WINCER ELECTRONICS LIMITED

17.0 EDID Table

Address (HEX)	Function	Hex	Dec	crc	nput values	Notes
00	Header	00	0		0	EDID Header
01		FF	255		255	
02		FF	255		255	
03		FF	255		255	
04		FF	255		255	
05		FF	255		255	
06		FF	255		255	
07		00	0		0	
08	ID Manufacturer Name	09	9		BOE	ID = BOE
09		E5	229			
0A	ID Product Code	3A	58		1850	ID = 1850
0B		07	7			
0C	32-bit serial No.	00	0			
0D		00	0			
0E		00	0			
0F		00	0			
10	Week of manufacture	1	1		1	
11	Year of Manufacture	15	21		2011	Manufactured in 2011
12	EDID Structure Ver.	01	1		1	EDID Ver 1.0
13	EDID revision #	03	3		1	EDID Rev. 0.1
14	Video input definition	80	128		-	
15	Max H image size	DC	220		220	220 cm (Approx)
16	Max V image size	8B	139		139	139 cm (Approx)
17	Display Gamma	78	120		2.2	Gamma curve = 2.2
18	Feature support	0A	10			RGB display, Preferred Timming mode
19	Red/Green low bits	8A	138		-	Red / Green Low Bits
1A	Blue/White low bits	40	64		-	Blue / White Low Bits
1B	Red x high bits	99	153	614	0.600	Red (x) = 10011001 (0.6)
1C	Red y high bits	57	87	348	0.340	Red (y) = 01010111 (0.34)
1D	Green x high bits	50	80	322	0.315	Green (x) = 01010000 (0.315)
1E	Green y high bits	90	144	578	0.565	Green (y) = 10010000 (0.565)
1F	Blue x high bits	26	38	153	0.150	Blue (x) = 00100110 (0.15)
20	BLue y high bits	20	32	128	0.125	Blue (y) = 00100000 (0.125)
21	White x high bits	50	80	320	0.313	White (x) = 01010000 (0.313)
22	White y high bits	54	84	336	0.329	White (y) = 01010100 (0.329)
23	Established timing 1	00	0		-	
24	Established timing 2	00	0		-	
25	Established timing 3	00	0		-	
26	Standard timing #1	01	1			Not Used
27		01	1			
28	Standard timing #2	01	1			Not Used
29		01	1			
2A	Standard timing #3	01	1			Not Used
2B		01	1			
2C	Standard timing #4	01	1			Not Used
2D		01	1			
2E	Standard timing #5	01	1			Not Used
2F		01	1			

深圳市智诚光电发展有限公司 WINCE ELECTRONICS

Address (HEX)	Function	Hex	Dec	crc	nput values	Notes
30	Standard timing #6	01	1			Not Used
31		01	1			
32	Standard timing #7	01	1			Not Used
33		01	1			
34	Standard timing #8	01	1			Not Used
35		01	1			
36	Detailed timing/monitor descriptor #1	64	100		65.00	65MHz Main clock
37		19	25			
38		00	0		1280	Hor Active = 1280
39		32	50		50	Hor Blanking = 50
3A		50	80		-	4 bits of Hor. Active + 4 bits of Hor. Blanking
3B		20	32		800	Ver Active = 768
3C		0C	12		12	Ver Blanking = 12
3D		30	48		-	4 bits of Ver. Active + 4 bits of Ver. Blanking
3E		0A	10		10	Hor Sync Offset = 10
3F		20	32		32	H Sync Pulse Width = 32
40		36	54		3	V sync Offset = 3 line
41		00	0		6	V Sync Pulse width : 6 line
42		D9	217		217	Horizontal Image Size = 217 mm (Low 8 bits)
43		88	136		136	Vertical Image Size = 136 mm (Low 8 bits)
44		00	0		-	4 bits of Hor Image Size + 4 bits of Ver Image Size
45		00	0		0	Hor Border (pixels)
46		00	0		0	Vertical Border (Lines)
47		19	25			Refer to right table
48	Detailed timing/monitor descriptor #2	00	0			ASCII Data Sting Tag
49		00	0			
4A		00	0			
4B		FE	254			
4C		00	0			
4D		0A	10			
4E		20	32			
4F		20	32			
50		20	32			
51		20	32			
52		20	32			
53		20	32			
54		20	32			
55		20	32			
56		20	32			
57		20	32			
58		20	32			
59		20	32			

深圳市智诚光电发展有限公司 WISER ELECTRONICS LIMITED

Address (HEX)	Function	Hex	Dec	crc	nput values	Notes
5A		00	0			
5B		00	0			
5C		00	0			ASCII Data Sting Tag
5D		FE	254			
5E		00	0			
5F		42	66		B	
60		4F	79		O	
61		45	69		E	
62	Detailed timing/monitor	20	32			
63	descriptor #3	4F	79		O	Manufacturer name : BOE OT
64		54	84		T	
65		0A	10			
66		20	32			
67		20	32			
68		20	32			
69		20	32			
6A		20	32			
6B		20	32			
6C		00	0			
6D		00	0			
6E		00	0			Product Name Tag (ASCII)
6F		FE	254			
70		00	0			
71		42	66		B	
72		50	80		P	
73		31	49		1	
74	Detailed timing/monitor	30	48		0	
75	descriptor #4	31	49		1	
76		57	87		W	
77		58	88		X	Model name : BP101WX1- 206
78		31	49		1	
79		2D	45		-	
7A		32	50		2	
7B		30	48		0	
7C		30	48		0	
7D		0A	10			
7E	Extension flag	00	0			
7F	Checksum	D7	D7	215	-	

深圳市智诚光电发展有限公司 WISECER ELECTRONICS LIMITED